C1220F ∅12mm*20.6mm, 贵金属电刷 Precious Metal Brushes

应用领域 : 安防、小型电子产品、飞机类遥控玩具、个人护理产品、便携工具等领域。

Applications: security equipment, small electronic products, remote control model aircraft, personal care products, portable electric tools, etc.

电机参数 / Motor Data

				35-0083	35-0103	35-0158
1	电压	Voltage	V	6.0	5.0	4.5
2	端电阻	Terminal resistance	Ω	7.4	2.5	10
3	空载转速	No-load speed	rpm	13800	18500	9500
4	空载电流	No-load current	mA	50	70	45
5	堵转转矩	Stall torque	mNm	2.6	3.6	1.7
6	堵转电流	Stall current	mA	846	2043	693
7	负载转矩	Load torque	mNm	0.294	0.294	0.196
8	负载转速	Load speed	rpm	12240	17000	8400
9	负载电流	Load current	mA	140	230	120
10	最大输出功率	Max. output power	W	0.94	1.75	0.42
11	最大效率	Max. efficiency	%	48	48.7	34.5
12	反电势常数	Back-EMF constant	mV/rpm	0.41	0.26	0.43
13	转矩常数	Torque constant	mNm/A	3.27	1.82	2.62
14	转速 / 转矩斜率	Speed/torque gradient	rpm/mNm	5306	5139	5588
15	压敏电阻	Varistor	Yes/No	Yes	Yes	Yes
16	重量	Weight	g	7.9	7.8	7.8
17	工作温度范围	Operating temperature range	°C	-20~+80		

特性曲线 /Characteristics Curve

C1220F35-0083

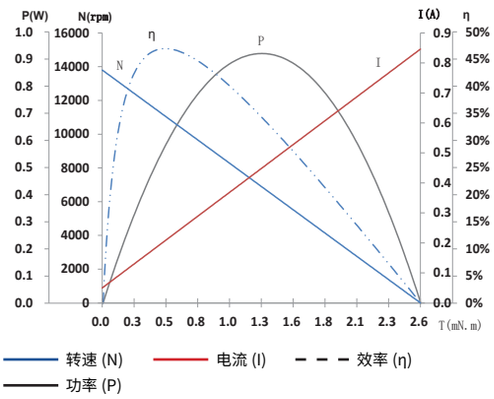

仅供参考，详细了解请以产品规格书为准。

For reference only, please refer to the product specification.

可选配置 / Options

齿轮箱 : 正齿轮 齿轮组主要技术指标详见第 159 页

Gearbox: spur gearbox the main technical parameters are detailed on page 159

性能 Special coils: 连续运行范围内可定制 customizable in continuous operation range

法兰 Flange: 标准前后法兰 standard front and rear flanges / 定制法兰 custom flanges

轴 Shaft: 长度 length / 异形 shape

电气连接 Electrical connection: 端子或导线 connector or wire / 导线长度 lead wires length

外观图 /Outline Drawing

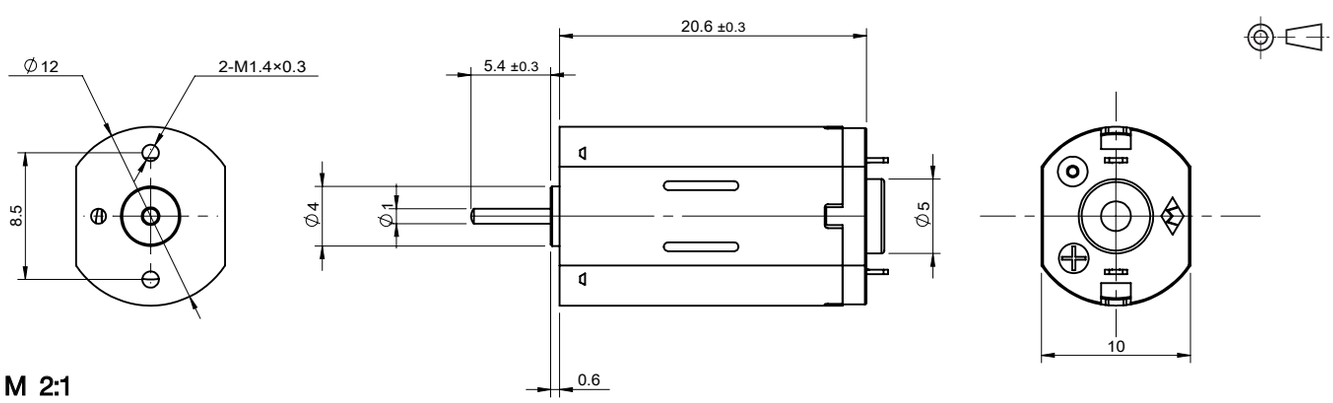

规格如有变更，恕不另行通知。Specification subject to change without notice.